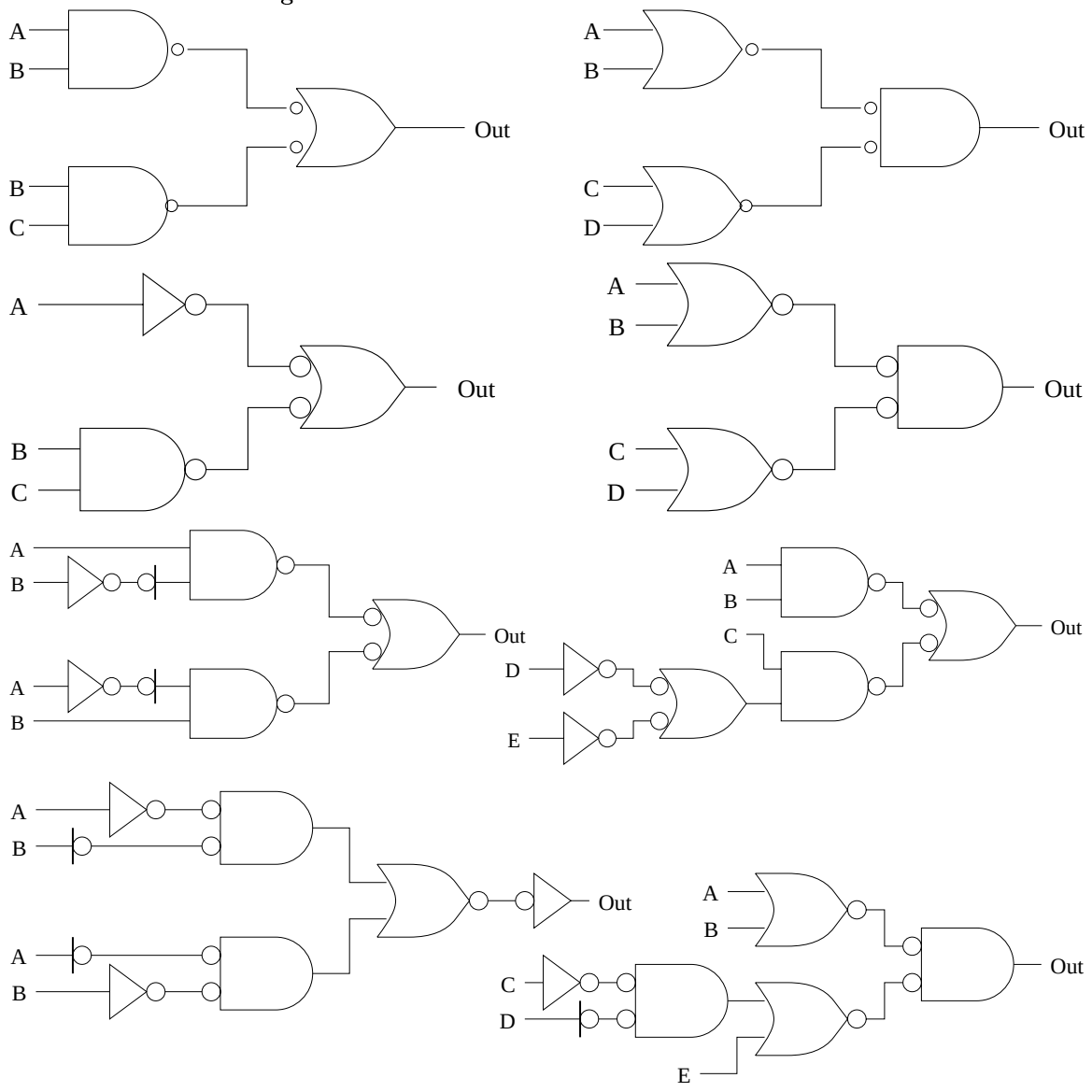Gate-Level Circuit Design